# Belleville Spring Washers - Imperial

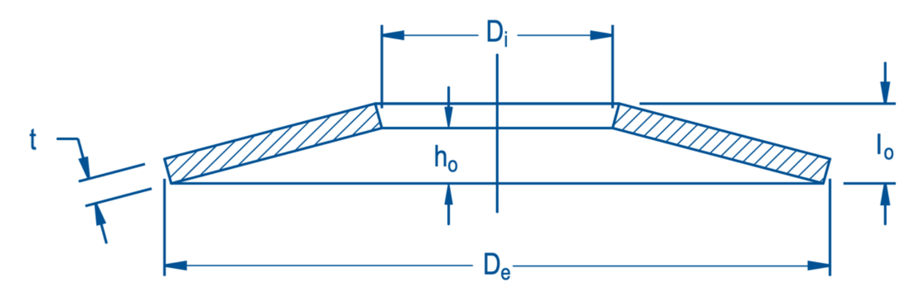


| Part | $D_e$ | $D_e$ | $D_i$ | $D_i$ | t | t | $l_0$ | $l_0$ | loaded height $H_1$ | | load at $H_1$ | | load at flat | |
|---|---|---|---|---|---|---|---|---|---|---|---|---|---|---|
| No. | Inch | mm | Inch | Inch | Inch | mm | Inch | mm | Inch | mm | lb | N | lb | N |
| BW3000 | 0.187 | 4.75 | 0.093 | 2.36 | 0.007 | 0.17 | 0.013 | 0.33 | 0.010 | 0.25 | 5.7-7.8 | 25.4-34.7 | 9.9 | 44 |
| BW3001 | 0.187 | 4.75 | 0.093 | 2.36 | 0.010 | 0.25 | 0.015 | 0.38 | 0.013 | 0.32 | 13-17.6 | 57.8-78.3 | 27.8 | 124 |
| BW3002 | 0.250 | 6.35 | 0.125 | 3.18 | 0.009 | 0.22 | 0.017 | 0.44 | 0.013 | 0.33 | 9.9-13.5 | 44-60.1 | 16.9 | 75 |
| BW3003 | 0.250 | 6.35 | 0.125 | 3.18 | 0.013 | 0.34 | 0.020 | 0.51 | 0.017 | 0.43 | 20-30 | 97.9-133.5 | 48 | 214 |
| BW3004 | 0.375 | 9.53 | 0.125 | 3.18 | 0.019 | 0.47 | 0.028 | 0.71 | 0.023 | 0.58 | 35.3-47.7 | 156.7-211.8 | 73 | 325 |
| BW3005 | 0.281 | 7.14 | 0.138 | 3.51 | 0.010 | 0.25 | 0.020 | 0.51 | 0.015 | 0.38 | 12.8-17.3 | 56.8-76.8 | 23 | 102 |
| BW3006 | 0.281 | 7.14 | 0.138 | 3.51 | 0.013 | 0.33 | 0.021 | 0.53 | 0.017 | 0.43 | 20.8-28.2 | 92.5-125.4 | 43 | 191 |
| BW3007 | 0.281 | 7.14 | 0.138 | 3.51 | 0.015 | 0.38 | 0.023 | 0.58 | 0.019 | 0.48 | 28.5-38.5 | 124.3-173.2 | 62 | 276 |
| BW3008 | 0.437 | 11.10 | 0.138 | 3.51 | 0.022 | 0.56 | 0.032 | 0.81 | 0.027 | 0.69 | 46.8-63.3 | 208.2-281.6 | 99 | 440 |
| BW3009 | 0.312 | 7.92 | 0.156 | 3.96 | 0.011 | 0.27 | 0.022 | 0.55 | 0.016 | 0.41 | 15.8-21.4 | 70.3-95.2 | 27 | 120 |
| BW3010 | 0.312 | 7.92 | 0.156 | 3.96 | 0.017 | 0.42 | 0.025 | 0.64 | 0.021 | 0.53 | 35-48 | 155.7-214 | 75 | 334 |
| BW3011 | 0.343 | 8.71 | 0.164 | 4.17 | 0.013 | 0.33 | 0.024 | 0.61 | 0.018 | 0.46 | 21.3-28.8 | 94.6-127.9 | 38 | 169 |
| BW3012 | 0.343 | 8.71 | 0.164 | 4.17 | 0.016 | 0.41 | 0.026 | 0.66 | 0.021 | 0.53 | 30.6-41.4 | 136.1-184.1 | 65 | 289 |
| BW3013 | 0.343 | 8.71 | 0.164 | 4.17 | 0.019 | 0.47 | 0.028 | 0.71 | 0.023 | 0.58 | 43-68 | 191.3-302.5 | 93 | 414 |
| BW3014 | 0.500 | 12.70 | 0.164 | 4.17 | 0.025 | 0.64 | 0.037 | 0.94 | 0.031 | 0.79 | 61.6-83.4 | 274-371 | 131 | 583 |
| BW3015 | 0.375 | 9.53 | 0.190 | 4.83 | 0.015 | 0.38 | 0.027 | 0.69 | 0.021 | 0.53 | 29-40 | 129-177.9 | 55 | 245 |
| BW3016 | 0.375 | 9.53 | 0.190 | 4.83 | 0.017 | 0.44 | 0.028 | 0.71 | 0.023 | 0.58 | 39.1-52.9 | 173-236 | 81 | 360 |
| BW3017 | 0.375 | 9.53 | 0.190 | 4.83 | 0.020 | 0.51 | 0.030 | 0.76 | 0.025 | 0.64 | 51-69 | 227-307 | 110 | 489 |
| BW3018 | 0.375 | 9.53 | 0.190 | 4.83 | 0.030 | 0.76 | 0.036 | 0.91 | 0.033 | 0.84 | 106-144 | 471.5-640.6 | 233 | 1036 |
| BW3019 | 0.562 | 14.27 | 0.190 | 4.83 | 0.019 | 0.48 | 0.037 | 0.94 | 0.028 | 0.71 | 38.3-51.8 | 169-231 | 67 | 298 |
| BW3020 | 0.562 | 14.27 | 0.190 | 4.83 | 0.028 | 0.71 | 0.042 | 1.07 | 0.035 | 0.89 | 74-100 | 329-445 | 163 | 725 |
| BW3021 | 0.437 | 11.10 | 0.220 | 5.59 | 0.016 | 0.41 | 0.031 | 0.79 | 0.023 | 0.58 | 34-46 | 151.2-205 | 60 | 267 |
| BW3022 | 0.437 | 11.10 | 0.220 | 5.59 | 0.020 | 0.51 | 0.032 | 0.81 | 0.026 | 0.66 | 49-66 | 219-293 | 98 | 436 |
| BW3023 | 0.437 | 11.10 | 0.220 | 5.59 | 0.023 | 0.58 | 0.034 | 0.86 | 0.029 | 0.74 | 66-88 | 292-390 | 139 | 618 |
| BW3024 | 0.437 | 11.10 | 0.220 | 5.59 | 0.034 | 0.86 | 0.050 | 1.27 | 0.042 | 1.07 | 106-144 | 471-641 | 229 | 1019 |
| BW3025 | 0.687 | 17.45 | 0.220 | 5.59 | 0.034 | 0.86 | 0.050 | 1.27 | 0.042 | 1.07 | 108-144 | 480-642 | 229 | 1019 |
| Part | $D_e$ | $D_e$ | $D_i$ | $D_i$ | t | t | $l_0$ | $l_0$ | loaded height $H_1$ | | load at $H_1$ | | load at flat | |
| No. | Inch | mm | Inch | Inch | Inch | mm | Inch | mm | Inch | mm | lb | N | lb | N |
| BW3026 | 0.500 | 12.70 | 0.255 | 6.48 | 0.018 | 0.46 | 0.034 | 0.86 | 0.026 | 0.66 | 38-52 | 169-231 | 70 | 311 |
| BW3027 | 0.500 | 12.70 | 0.255 | 6.48 | 0.022 | 0.55 | 0.036 | 0.91 | 0.029 | 0.74 | 55-77 | 245-343 | 115 | 512 |
| BW3028 | 0.500 | 12.70 | 0.255 | 6.48 | 0.025 | 0.64 | 0.038 | 0.97 | 0.031 | 0.79 | 80-110 | 356-489 | 160 | 712 |
| BW3029 | 0.500 | 12.70 | 0.255 | 6.48 | 0.038 | 0.97 | 0.047 | 1.19 | 0.043 | 1.09 | 161-219 | 716-974 | 400 | 1779 |
| BW3030 | 0.562 | 14.27 | 0.255 | 6.48 | 0.042 | 1.07 | 0.055 | 1.40 | 0.045 | 1.14 | 345-462 | 1536-2055 | 567 | 2522 |
| BW3031 | 0.637 | 16.18 | 0.255 | 6.48 | 0.032 | 0.81 | 0.048 | 1.22 | 0.040 | 1.02 | 100-136 | 444-605 | 222 | 988 |
| BW3032 | 0.687 | 17.45 | 0.255 | 6.48 | 0.052 | 1.32 | 0.069 | 1.75 | 0.055 | 1.40 | 535-716 | 2382-3185 | 884 | 3932 |
| BW3033 | 0.750 | 19.05 | 0.255 | 6.48 | 0.025 | 0.64 | 0.049 | 1.24 | 0.037 | 0.94 | 67-89 | 296-396 | 114 | 507 |
| BW3034 | 0.750 | 19.05 | 0.255 | 6.48 | 0.036 | 0.91 | 0.054 | 1.37 | 0.045 | 1.14 | 127-170 | 565-755 | 261 | 1161 |
| BW3035 | 0.750 | 19.05 | 0.255 | 6.48 | 0.052 | 1.32 | 0.065 | 1.65 | 0.058 | 1.47 | 264-358 | 1174-1592 | 560 | 2509 |
| BW3036 | 0.812 | 20.62 | 0.265 | 6.73 | 0.061 | 1.55 | 0.084 | 2.13 | 0.066 | 1.68 | 820-1097 | 3649-4881 | 1350 | 6005 |
| BW3037 | 0.812 | 20.62 | 0.265 | 6.73 | 0.050 | 1.27 | 0.066 | 1.68 | 0.053 | 1.35 | 268-358 | 1191-1593 | 445 | 1979 |
| BW3038 | 0.875 | 22.23 | 0.282 | 7.16 | 0.075 | 1.91 | 0.086 | 2.18 | 0.077 | 1.96 | 711-942 | 3163-4188 | 1451 | 6500 |
| BW3039 | 0.625 | 15.88 | 0.317 | 8.05 | 0.022 | 0.56 | 0.042 | 1.07 | 0.032 | 0.81 | 59-81 | 262-360 | 105 | 467 |
| BW3040 | 0.625 | 15.88 | 0.317 | 8.05 | 0.032 | 0.81 | 0.048 | 1.22 | 0.040 | 1.02 | 123-167 | 547-743 | 260 | 1157 |
| BW3041 | 0.625 | 15.88 | 0.317 | 8.05 | 0.047 | 1.19 | 0.059 | 1.50 | 0.053 | 1.35 | 255-345 | 1134-1535 | 600 | 2669 |
| BW3042 | 0.687 | 17.45 | 0.328 | 8.33 | 0.052 | 1.32 | 0.068 | 1.73 | 0.055 | 1.40 | 544-728 | 2420-3237 | 892 | 3968 |
| BW3043 | 0.812 | 20.62 | 0.328 | 8.33 | 0.061 | 1.55 | 0.081 | 2.06 | 0.065 | 1.65 | 734-982 | 3265-4367 | 1214 | 5400 |
| BW3044 | 0.937 | 23.80 | 0.317 | 8.05 | 0.030 | 0.76 | 0.060 | 1.52 | 0.058 | 1.47 | 95-127 | 423-565 | 159 | 707 |
| BW3045 | 0.937 | 23.80 | 0.317 | 8.05 | 0.045 | 1.14 | 0.067 | 1.70 | 0.056 | 1.42 | 185-251 | 823-1117 | 395 | 1757 |
| BW3046 | 0.937 | 23.80 | 0.328 | 8.33 | 0.070 | 1.78 | 0.094 | 2.39 | 0.075 | 1.91 | 976-1305 | 4341-5805 | 1610 | 7161 |
| BW3047 | 1.000 | 25.40 | 0.344 | 8.74 | 0.090 | 2.29 | 0.102 | 2.59 | 0.092 | 2.34 | 1032-1367 | 4590-6079 | 2106 | 9434 |
| BW3048 | 1.125 | 28.58 | 0.344 | 8.74 | 0.062 | 1.57 | 0.083 | 2.11 | 0.066 | 1.68 | 406-543 | 1086-2415 | 671 | 2985 |
| BW3049 | 0.812 | 20.62 | 0.390 | 9.91 | 0.028 | 0.71 | 0.051 | 1.30 | 0.039 | 0.99 | 93-127 | 414-565 | 175 | 778 |
| BW3050 | 0.812 | 20.62 | 0.390 | 9.91 | 0.034 | 0.86 | 0.055 | 1.40 | 0.044 | 1.12 | 141-191 | 627-850 | 282 | 1254 |
| BW3051 | 0.812 | 20.62 | 0.390 | 9.91 | 0.040 | 1.02 | 0.059 | 1.50 | 0.049 | 1.24 | 199-271 | 885-1205 | 415 | 1846 |
| BW3052 | 0.812 | 20.62 | 0.390 | 9.91 | 0.056 | 1.42 | 0.070 | 1.78 | 0.063 | 1.60 | 365-495 | 1624-2202 | 845 | 3759 |
| BW3053 | 0.812 | 20.62 | 0.390 | 9.91 | 0.061 | 1.55 | 0.079 | 2.01 | 0.065 | 1.65 | 700-936 | 3112-4161 | 1163 | 5173 |
| BW3054 | 0.937 | 23.80 | 0.390 | 9.91 | 0.070 | 1.78 | 0.092 | 2.34 | 0.074 | 1.88 | 924-1236 | 4110-5497 | 1528 | 6797 |
| BW3055 | 0.950 | 24.13 | 0.380 | 9.65 | 0.047 | 1.19 | 0.070 | 1.78 | 0.058 | 1.47 | 222-300 | 986-1334 | 463 | 2060 |
| BW3056 | 1.125 | 28.58 | 0.380 | 9.65 | 0.078 | 1.98 | 0.097 | 2.46 | 0.088 | 2.24 | 507-687 | 2251-3056 | 1235 | 5494 |
| BW3057 | 1.250 | 31.75 | 0.390 | 9.91 | 0.065 | 1.65 | 0.085 | 2.16 | 0.069 | 1.75 | 363-485 | 1613-2158 | 598 | 2660 |
| BW3058 | 0.875 | 22.23 | 0.407 | 10.34 | 0.062 | 1.57 | 0.074 | 1.88 | 0.064 | 1.63 | 411-550 | 1828-2445 | 644 | 2865 |
| BW3059 | 0.875 | 22.23 | 0.407 | 10.34 | 0.089 | 2.26 | 0.100 | 2.54 | 0.091 | 2.31 | 1288-1706 | 5729-7587 | 2628 | 11775 |
| BW3060 | 0.875 | 22.23 | 0.407 | 10.34 | 0.109 | 2.77 | 0.124 | 3.15 | 0.112 | 2.84 | 3227-4274 | 14354-19009 | 6585 | 29501 |
| BW3061 | 1.000 | 25.40 | 0.407 | 10.34 | 0.062 | 1.57 | 0.092 | 2.34 | 0.068 | 1.73 | 777-1040 | 3457-4624 | 1262 | 5613 |
| BW3062 | 1.000 | 25.40 | 0.407 | 10.34 | 0.105 | 2.67 | 0.118 | 3.00 | 0.108 | 2.74 | 1828-2421 | 8131-10768 | 3730 | 16711 |
| Part | $D_e$ | $D_e$ | $D_i$ | $D_i$ | t | t | $l_0$ | $l_0$ | loaded height $H_1$ | | load at $H_1$ | | load at flat | |
| No. | Inch | mm | Inch | Inch | Inch | mm | Inch | mm | Inch | mm | lb | N | lb | N |
| BW3063 | 1.188 | 30.18 | 0.407 | 10.34 | 0.098 | 2.49 | 0.119 | 3.02 | 0.102 | 2.59 | 1658-2196 | 7375-9767 | 3383 | 15157 |
| BW3064 | 1.188 | 30.18 | 0.407 | 10.34 | 0.105 | 2.67 | 0.125 | 3.18 | 0.109 | 2.77 | 1940-2569 | 8629-11428 | 3959 | 17735 |
| BW3065 | 1.240 | 31.50 | 0.407 | 10.34 | 0.072 | 1.83 | 0.096 | 2.44 | 0.077 | 1.96 | 692-916 | 3078-4076 | 1412 | 6326 |
| BW3066 | 1.250 | 31.75 | 0.407 | 10.34 | 0.074 | 1.88 | 0.098 | 2.49 | 0.079 | 2.01 | 738-977 | 3283-4347 | 1506 | 6747 |
| BW3067 | 0.875 | 22.23 | 0.442 | 11.23 | 0.031 | 0.79 | 0.059 | 1.50 | 0.045 | 1.14 | 114-156 | 507-694 | 205 | 912 |
| BW3068 | 0.875 | 22.23 | 0.442 | 11.23 | 0.045 | 1.14 | 0.067 | 1.70 | 0.056 | 1.42 | 229-311 | 1018-1383 | 495 | 2202 |
| BW3069 | 0.875 | 22.23 | 0.442 | 11.23 | 0.059 | 1.50 | 0.083 | 2.11 | 0.064 | 1.63 | 777-1040 | 3457-4624 | 1272 | 5658 |
| BW3070 | 0.875 | 22.23 | 0.460 | 11.68 | 0.059 | 1.50 | 0.083 | 2.11 | 0.064 | 1.63 | 777-1041 | 3457-4625 | 1272 | 5658 |
| BW3071 | 0.937 | 23.80 | 0.453 | 11.51 | 0.070 | 1.78 | 0.090 | 2.29 | 0.074 | 1.88 | 890-1190 | 3957-5292 | 1471 | 6543 |
| BW3072 | 1.188 | 30.18 | 0.453 | 11.51 | 0.089 | 2.26 | 0.120 | 3.05 | 0.095 | 2.41 | 1880-2490 | 8362-11074 | 3836 | 17187 |
| BW3073 | 1.000 | 25.40 | 0.505 | 12.83 | 0.035 | 0.89 | 0.067 | 1.70 | 0.051 | 1.30 | 148-202 | 658-899 | 260 | 1157 |
| BW3074 | 1.000 | 25.40 | 0.505 | 12.83 | 0.043 | 1.09 | 0.071 | 1.80 | 0.057 | 1.45 | 213-288 | 943-1281 | 431 | 1917 |
| BW3075 | 1.000 | 25.40 | 0.505 | 12.83 | 0.050 | 1.27 | 0.075 | 1.91 | 0.062 | 1.57 | 289-391 | 1286-1739 | 600 | 2669 |
| BW3076 | 1.000 | 25.40 | 0.505 | 12.83 | 0.073 | 1.85 | 0.091 | 2.31 | 0.082 | 2.08 | 573-777 | 2549-3456 | 1335 | 5938 |
| BW3077 | 1.262 | 32.05 | 0.505 | 12.83 | 0.060 | 1.52 | 0.091 | 2.31 | 0.075 | 1.91 | 348-470 | 1548-2091 | 731 | 3252 |
| BW3078 | 1.500 | 38.10 | 0.505 | 12.83 | 0.047 | 1.19 | 0.093 | 2.36 | 0.070 | 1.78 | 217-290 | 964-1289 | 366 | 1628 |
| BW3079 | 1.500 | 38.10 | 0.505 | 12.83 | 0.070 | 1.78 | 0.104 | 2.64 | 0.087 | 2.21 | 420-570 | 1868-2535 | 896 | 3986 |
| BW3080 | 1.500 | 38.10 | 0.505 | 12.83 | 0.102 | 2.59 | 0.128 | 3.25 | 0.115 | 2.92 | 897-1200 | 3991-5338 | 2060 | 9163 |
| BW3081 | 1.000 | 25.40 | 0.532 | 13.51 | 0.062 | 1.57 | 0.085 | 2.16 | 0.067 | 1.70 | 665-889 | 2958-3956 | 1090 | 4848 |
| BW3082 | 1.000 | 25.40 | 0.532 | 13.51 | 0.089 | 2.26 | 0.100 | 2.54 | 0.091 | 2.31 | 1061-1405 | 4719-6250 | 2165 | 9699 |
| BW3083 | 1.063 | 27.00 | 0.532 | 13.51 | 0.090 | 2.29 | 0.106 | 2.69 | 0.093 | 2.36 | 1363-1805 | 6063-8029 | 2781 | 12460 |
| BW3084 | 1.063 | 27.00 | 0.532 | 13.51 | 0.100 | 2.54 | 0.116 | 2.95 | 0.103 | 2.62 | 1615-2160 | 7184-9607 | 2712 | 12063 |
| BW3085 | 1.125 | 28.58 | 0.532 | 13.51 | 0.062 | 1.57 | 0.083 | 2.11 | 0.066 | 1.68 | 449-601 | 1997-2671 | 736 | 3274 |
| BW3086 | 1.219 | 30.96 | 0.532 | 13.51 | 0.074 | 1.88 | 0.104 | 2.64 | 0.080 | 2.03 | 1035-1371 | 4604-6097 | 2112 | 9462 |
| BW3087 | 1.250 | 31.75 | 0.532 | 13.51 | 0.062 | 1.57 | 0.092 | 2.34 | 0.068 | 1.73 | 501-670 | 2228-2980 | 860 | 3825 |
| BW3088 | 1.250 | 31.75 | 0.532 | 13.51 | 0.078 | 1.98 | 0.103 | 2.62 | 0.083 | 2.11 | 944-1250 | 4199-5561 | 1926 | 8630 |
| BW3089 | 1.250 | 31.75 | 0.532 | 13.51 | 0.090 | 2.29 | 0.114 | 2.90 | 0.095 | 2.41 | 1387-1837 | 6169-8170 | 2830 | 12680 |
| BW3090 | 1.375 | 34.93 | 0.532 | 13.51 | 0.100 | 2.54 | 0.120 | 3.05 | 0.104 | 2.64 | 1274-1687 | 5667-7505 | 2600 | 11647 |
| BW3091 | 1.500 | 38.10 | 0.532 | 13.51 | 0.095 | 2.41 | 0.125 | 3.18 | 0.101 | 2.57 | 1367-1810 | 6080-8052 | 2789 | 12497 |
| BW3092 | 1.125 | 28.58 | 0.567 | 14.40 | 0.038 | 0.97 | 0.073 | 1.85 | 0.055 | 1.40 | 165-225 | 733-1001 | 285 | 1268 |
| BW3093 | 1.125 | 28.58 | 0.567 | 14.40 | 0.056 | 1.42 | 0.084 | 2.13 | 0.070 | 1.78 | 344-466 | 1530-2073 | 735 | 3269 |
| BW3094 | 1.188 | 30.18 | 0.594 | 15.09 | 0.089 | 2.26 | 0.115 | 2.92 | 0.094 | 2.39 | 1727-2287 | 7682-10173 | 3524 | 15788 |
| BW3095 | 1.250 | 31.75 | 0.630 | 16.00 | 0.040 | 1.02 | 0.082 | 2.08 | 0.061 | 1.55 | 195-265 | 867-1179 | 330 | 1468 |
| BW3096 | 1.250 | 31.75 | 0.630 | 16.00 | 0.051 | 1.30 | 0.087 | 2.21 | 0.069 | 1.75 | 306-374 | 1361-1664 | 582 | 2589 |
| BW3097 | 1.250 | 31.75 | 0.630 | 16.00 | 0.062 | 1.57 | 0.092 | 2.34 | 0.077 | 1.96 | 403-547 | 1793-2433 | 870 | 3870 |
| BW3098 | 1.250 | 31.75 | 0.630 | 16.00 | 0.089 | 2.26 | 0.111 | 2.82 | 0.100 | 2.54 | 833-1127 | 3705-5013 | 1914 | 8514 |
| BW3099 | 1.875 | 47.63 | 0.630 | 16.00 | 0.057 | 1.45 | 0.115 | 2.92 | 0.085 | 2.16 | 333-407 | 1481-1810 | 522 | 2322 |
| Part | $D_e$ | $D_e$ | $D_i$ | $D_i$ | t | t | $l_0$ | $l_0$ | loaded height $H_1$ | | load at $H_1$ | | load at flat | |
| No. | Inch | mm | Inch | Inch | Inch | mm | Inch | mm | Inch | mm | lb | N | lb | N |
| BW3100 | 1.875 | 47.63 | 0.630 | 16.00 | 0.086 | 2.18 | 0.129 | 3.28 | 0.107 | 2.72 | 620-840 | 2758-3737 | 1319 | 5867 |
| BW3101 | 1.875 | 47.63 | 0.630 | 16.00 | 0.127 | 3.23 | 0.158 | 4.01 | 0.142 | 3.61 | 1399-1893 | 5223-8420 | 3105 | 13812 |
| BW3102 | 1.312 | 33.32 | 0.657 | 16.69 | 0.098 | 2.49 | 0.126 | 3.20 | 0.104 | 2.64 | 2043-2706 | 9087-12034 | 4169 | 18677 |
| BW3103 | 1.500 | 38.10 | 0.657 | 16.69 | 0.100 | 2.54 | 0.140 | 3.56 | 0.108 | 2.74 | 2247-2976 | 9995-13236 | 4585 | 20542 |
| BW3104 | 1.625 | 41.28 | 0.657 | 16.69 | 0.085 | 2.16 | 0.105 | 2.67 | 0.089 | 2.26 | 567-751 | 2522-3340 | 1157 | 5183 |
| BW3105 | 1.875 | 47.63 | 0.657 | 16.69 | 0.057 | 1.45 | 0.115 | 2.92 | 0.069 | 1.75 | 354-474 | 1575-2106 | 525 | 2335 |
| BW3106 | 1.375 | 34.93 | 0.692 | 17.58 | 0.044 | 1.12 | 0.088 | 2.24 | 0.065 | 1.65 | 225-305 | 1001-1357 | 375 | 1668 |
| BW3107 | 1.375 | 34.93 | 0.692 | 17.58 | 0.067 | 1.70 | 0.101 | 2.57 | 0.074 | 1.88 | 737-976 | 3278-4341 | 1504 | 6738 |
| BW3108 | 2.000 | 50.80 | 0.692 | 17.58 | 0.125 | 3.18 | 0.161 | 4.09 | 0.131 | 3.34 | 2090-2824 | 9296-12563 | 4233 | 18963 |
| BW3109 | 1.500 | 38.10 | 0.755 | 19.18 | 0.045 | 1.14 | 0.093 | 2.36 | 0.069 | 1.75 | 241-326 | 1072-1450 | 400 | 1779 |
| BW3110 | 1.500 | 38.10 | 0.755 | 19.18 | 0.060 | 1.52 | 0.102 | 2.59 | 0.081 | 2.06 | 397-531 | 1767-2363 | 774 | 3443 |
| BW3111 | 1.500 | 38.10 | 0.755 | 19.18 | 0.062 | 1.57 | 0.107 | 2.72 | 0.081 | 2.06 | 364-546 | 1618-2428 | 774 | 3443 |
| BW3112 | 1.500 | 38.10 | 0.755 | 19.18 | 0.072 | 1.83 | 0.107 | 2.72 | 0.089 | 2.26 | 565-748 | 2513-3328 | 1153 | 5165 |
| BW3113 | 1.500 | 38.10 | 0.755 | 19.18 | 0.107 | 2.72 | 0.134 | 3.40 | 0.121 | 3.07 | 1190-1610 | 5293-7162 | 2833 | 12602 |
| BW3114 | 2.250 | 57.15 | 0.755 | 19.18 | 0.068 | 1.73 | 0.137 | 3.48 | 0.103 | 2.62 | 463-553 | 2059-2460 | 732 | 3256 |
| BW3115 | 2.250 | 57.15 | 0.755 | 19.18 | 0.102 | 2.59 | 0.153 | 3.89 | 0.127 | 3.23 | 910-1113 | 4048-4951 | 1822 | 8105 |
| BW3116 | 2.250 | 57.15 | 0.755 | 19.18 | 0.150 | 3.81 | 0.188 | 4.78 | 0.169 | 4.29 | 1853-2509 | 8242-11161 | 4295 | 19105 |
| BW3117 | 2.375 | 60.33 | 0.813 | 20.65 | 0.156 | 3.96 | 0.205 | 5.21 | 0.166 | 4.22 | 3926-5305 | 17463-23598 | 7951 | 35621 |
| BW3118 | 1.750 | 44.45 | 0.875 | 22.23 | 0.057 | 1.45 | 0.114 | 2.90 | 0.085 | 2.16 | 382-518 | 1699-2304 | 650 | 2891 |
| BW3119 | 1.750 | 44.45 | 0.875 | 22.23 | 0.085 | 2.16 | 0.128 | 3.25 | 0.106 | 2.69 | 600-1220 | 2668-5427 | 1630 | 7251 |
| BW3120 | 2.000 | 50.80 | 1.000 | 25.40 | 0.065 | 1.65 | 0.130 | 3.30 | 0.098 | 2.49 | 502-679 | 2233-3020 | 860 | 3825 |
| BW3121 | 2.000 | 50.80 | 1.000 | 25.40 | 0.084 | 2.13 | 0.136 | 3.45 | 0.110 | 2.79 | 727-983 | 3322-4372 | 1488 | 6619 |
| BW3122 | 2.000 | 50.80 | 1.000 | 25.40 | 0.097 | 2.46 | 0.145 | 3.68 | 0.121 | 3.07 | 1002-1358 | 4457-6041 | 2140 | 9519 |
| BW3123 | 2.000 | 50.80 | 1.000 | 25.40 | 0.142 | 3.61 | 0.177 | 4.50 | 0.160 | 4.06 | 2048-2772 | 9110-12330 | 4824 | 21458 |
| BW3124 | 3.000 | 76.20 | 1.000 | 25.40 | 0.090 | 2.29 | 0.180 | 4.57 | 0.135 | 3.43 | 727-983 | 9110-12330 | 4824 | 21458 |
| BW3125 | 3.000 | 76.20 | 1.000 | 25.40 | 0.135 | 3.43 | 0.202 | 5.13 | 0.168 | 4.27 | 1548-1893 | 6886-8420 | 3118 | 13870 |
| BW3126 | 2.250 | 57.15 | 1.125 | 28.58 | 0.073 | 1.85 | 0.148 | 3.76 | 0.113 | 2.87 | 621-840 | 2762-3736 | 1100 | 4893 |
| BW3127 | 2.250 | 57.15 | 1.125 | 28.58 | 0.111 | 2.82 | 0.165 | 4.19 | 0.139 | 3.53 | 1241-1679 | 5520-7468 | 2780 | 12366 |
| BW3128 | 2.250 | 57.15 | 1.125 | 28.58 | 0.159 | 4.04 | 0.198 | 5.03 | 0.179 | 4.55 | 2550-3460 | 11343-15390 | 5973 | 26569 |
| BW3129 | 2.500 | 63.50 | 1.250 | 31.75 | 0.080 | 2.03 | 0.160 | 4.06 | 0.120 | 3.05 | 739-1000 | 3287-4448 | 1260 | 5605 |
| BW3130 | 2.500 | 63.50 | 1.250 | 31.75 | 0.120 | 3.05 | 0.180 | 4.57 | 0.150 | 3.81 | 1496-2024 | 6655-9003 | 3200 | 14234 |
| BW3131 | 2.500 | 63.50 | 1.250 | 31.75 | 0.175 | 4.45 | 0.219 | 5.56 | 0.197 | 5.00 | 3085-4175 | 13722-18571 | 7149 | 31800 |
| BW3132 | 3.750 | 95.25 | 1.250 | 31.75 | 0.168 | 4.27 | 0.251 | 6.38 | 0.209 | 5.31 | 2348-2870 | 10444-12766 | 4754 | 21147 |
| BW3133 | 2.750 | 69.85 | 1.375 | 34.93 | 0.087 | 2.21 | 0.173 | 4.39 | 0.132 | 3.35 | 816-1104 | 3630-4911 | 1440 | 6405 |
| BW3134 | 2.750 | 69.85 | 1.375 | 34.93 | 0.132 | 3.35 | 0.196 | 4.98 | 0.165 | 4.19 | 1658--2243 | 7375-9977 | 3210 | 14279 |
| BW3135 | 2.750 | 69.85 | 1.407 | 35.74 | 0.087 | 2.21 | 0.173 | 4.39 | 0.104 | 2.64 | 967-1294 | 4303-5754 | 1440 | 6405 |
| BW3136 | 3.000 | 76.20 | 1.500 | 38.10 | 0.093 | 2.36 | 0.189 | 4.80 | 0.143 | 3.63 | 944-1277 | 4199-5681 | 1630 | 7251 |
| Part | $D_e$ | $D_e$ | $D_i$ | $D_i$ | t | t | $l_0$ | $l_0$ | loaded height $H_1$ | | load at $H_1$ | | load at flat | |
| No. | Inch | mm | Inch | Inch | Inch | mm | Inch | mm | Inch | mm | lb | N | lb | N |
| BW3137 | 3.000 | 76.20 | 1.500 | 38.10 | 0.143 | 3.63 | 0.213 | 5.41 | 0.180 | 4.57 | 2052-2508 | 9127-11156 | 4380 | 19483 |
| BW3138 | 3.000 | 76.20 | 1.532 | 38.91 | 0.093 | 2.36 | 0.189 | 4.80 | 0.112 | 2.84 | 1114-1490 | 4955-6627 | 1630 | 7250 |
| BW3139 | 4.000 | 101.60 | 2.000 | 50.80 | 0.125 | 3.18 | 0.250 | 6.35 | 0.187 | 4.75 | 1709-2312 | 7602-10284 | 2910 | 12944 |
| BW3140 | 4.000 | 101.60 | 2.000 | 50.80 | 0.187 | 4.75 | 0.280 | 7.11 | 0.233 | 5.92 | 3409-4612 | 15163-20514 | 7280 | 32383 |